Cambridge International AS & A Level

Cambridge Assessment International Education
Cambridge International Advanced Subsidiary and Advanced Level

CANDIDATE NAME

CENTRE NUMBER

CANDIDATE NUMBER

3326878489

PHYSICS **9702/33**

Paper 3 Advanced Practical Skills 1 **May/June 2019**

2 hours

Candidates answer on the Question Paper.

Additional Materials: As listed in the Confidential Instructions.

READ THESE INSTRUCTIONS FIRST

Write your centre number, candidate number and name on all the work you hand in.
Write in dark blue or black pen.
You may use an HB pencil for any diagrams or graphs.
Do not use staples, paper clips, glue or correction fluid.
DO **NOT** WRITE IN ANY BARCODES.

Answer **both** questions.
You will be allowed to work with the apparatus for a maximum of one hour for each question.
You are expected to record all your observations as soon as these observations are made, and to plan the presentation of the records so that it is not necessary to make a fair copy of them.
You are reminded of the need for good English and clear presentation in your answers.

Electronic calculators may be used.
You may lose marks if you do not show your working or if you do not use appropriate units.

Additional answer paper and graph paper should be used only if it becomes necessary to do so.

At the end of the examination, fasten all your work securely together.
The number of marks is given in brackets [ ] at the end of each question or part question.

For Examiner's Use	
1	
2	
Total	

This document consists of **11** printed pages and **1** blank page.

© UCLES 2019

Cambridge Assessment International Education

BLANK PAGE

© UCLES 2019

You may not need to use all of the materials provided.

1 In this experiment, you will investigate the oscillations of a metre rule.

(a) • Set up the apparatus as shown in Fig. 1.1.

• Attach the beaker to the block of wood using modelling clay.

• The distance between the centre of each 150 g mass and the nearest end of the rule is x.

Adjust the apparatus so that the value of x is approximately 20 cm and the rule is balanced on the beaker, as shown in Fig. 1.1.

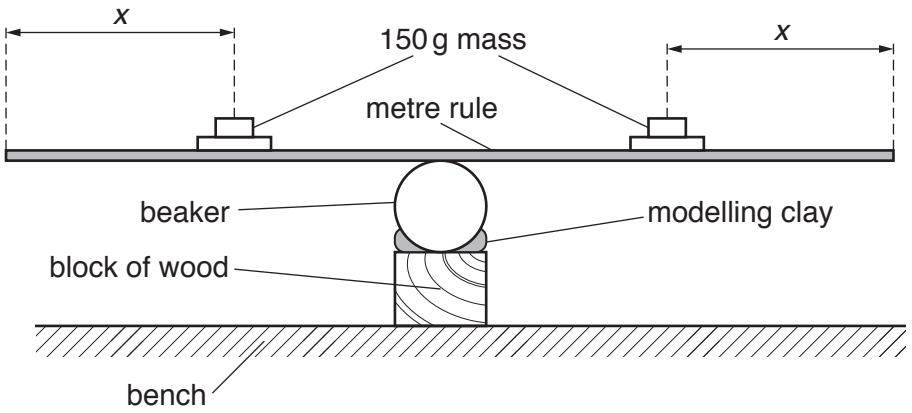

Fig. 1.1

• Record x.

x = ... [1]

(b) • Pull one end of the rule down through a short distance.

• Release the end of the rule so that it oscillates.

• Determine the period T of these oscillations.

T = ... [2]

© UCLES 2019

(c) **Reduce** x by changing the positions of the 150 g masses on the rule.
Measure and record x and T. Repeat until you have five sets of values.

Record your results in a table.

[7]

(d) **(i)** Plot a graph of T on the y-axis against x on the x-axis. [3]

(ii) Draw the straight line of best fit. [1]

(iii) Determine the gradient and y-intercept of this line.

gradient = ...

y-intercept = ...
[2]

© UCLES 2019

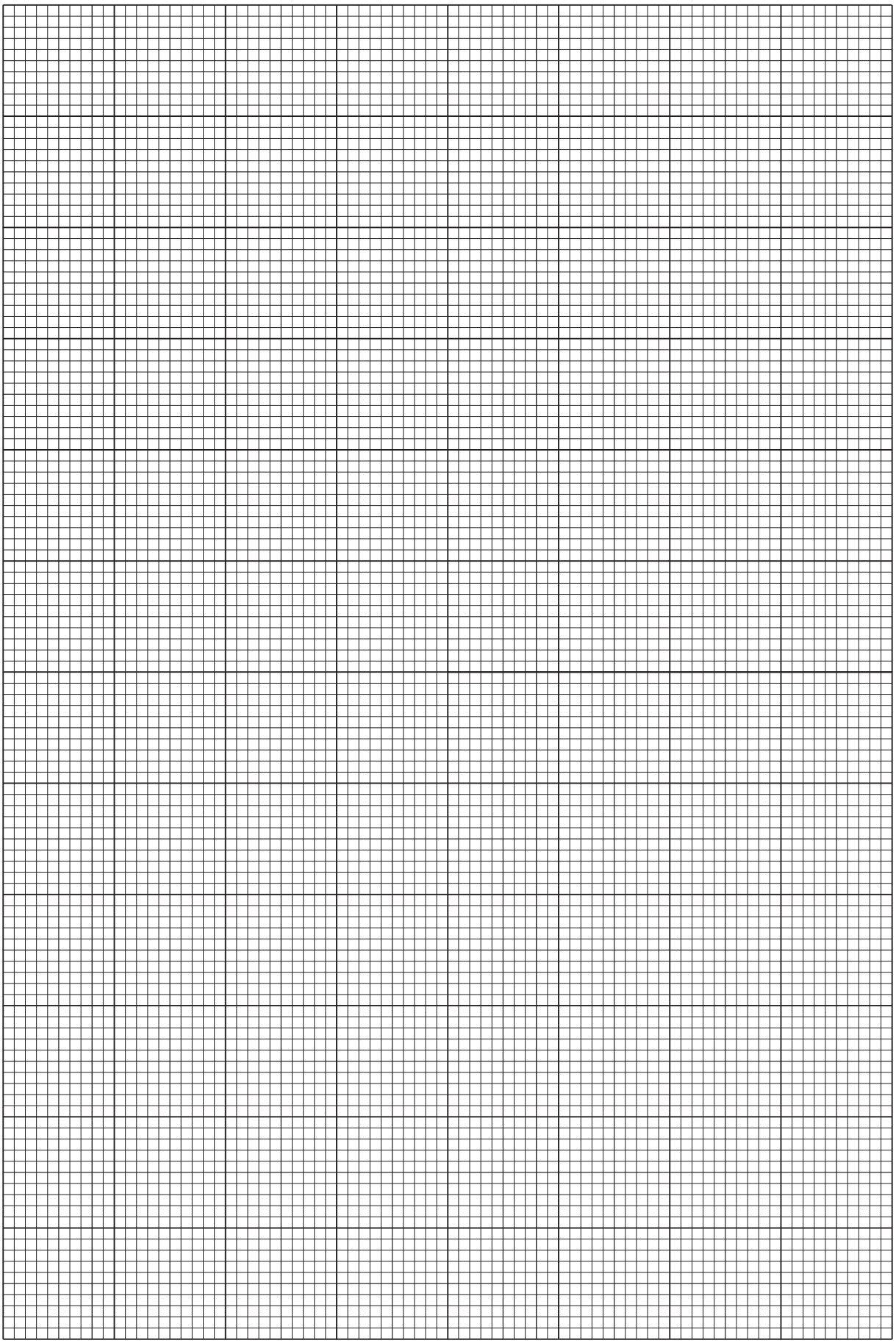

© UCLES 2019

[Turn over

(e) It is suggested that the quantities T and x are related by the equation

$$T = Px + Q$$

where P and Q are constants.

Using your answers in **(d)(iii)**, determine the values of P and Q.
Give appropriate units.

$P =$ .....

$Q =$ .....
[2]

(f) For one particular value of x, the value of T is the same as when there are no masses on the rule.

- Remove the masses from the rule.
- Balance the rule on the beaker and repeat **(b)**.

$T =$ .....

- Use your value of T and answers in **(e)** to calculate this value of x.
  Give your answer to three significant figures.

$x =$ ..... [2]

[Total: 20]

© UCLES 2019

You may not need to use all of the materials provided.

2 In this experiment, you will investigate the path of a bouncing ball.

(a) (i) • Set up the apparatus as shown in Fig. 2.1.

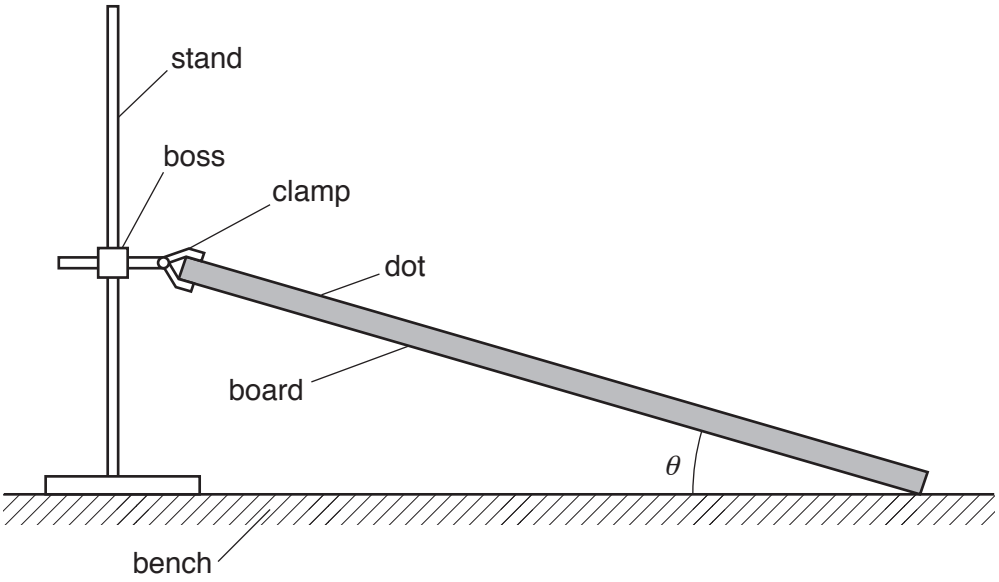

Fig. 2.1

- Support the board using the clamp.
- The dot on the board should be facing upwards and be close to the top end of the board.

The angle θ between the board and the bench should be approximately 25°.

Measure and record θ.

θ = ...° [1]

(ii) Calculate $(\sin 2\theta)(\cos 2\theta)$.

$(\sin 2\theta)(\cos 2\theta)$ = ... [1]

(iii) Justify the number of significant figures that you have given for your value of $(\sin 2\theta)(\cos 2\theta)$.

.....

.....

..... [1]

(b) • Use the G-clamp to support the card vertically, as shown in Fig. 2.2.

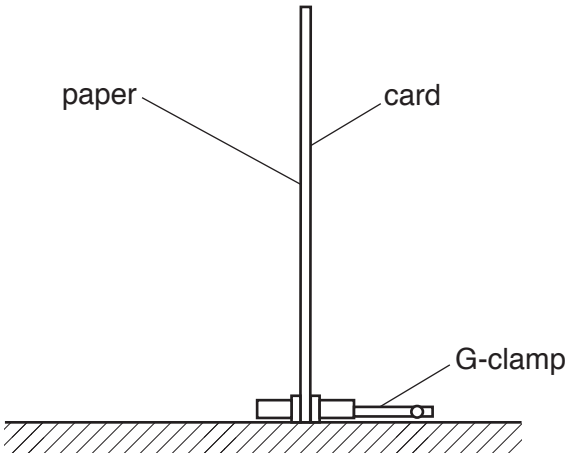

Fig. 2.2

• Position the card at the lower edge of the board, as shown in Fig. 2.3.

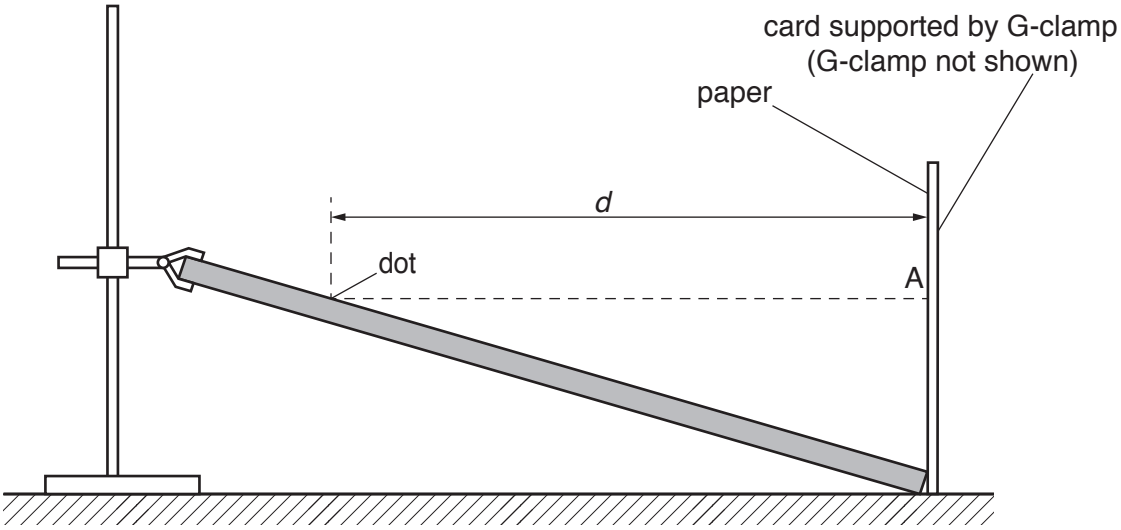

Fig. 2.3

• Draw a horizontal line on the paper at the same height above the bench as the dot. Label this line A.

• The horizontal distance between the line A and the dot is *d*.

Measure and record *d*.

d = ... [2]

© UCLES 2019

(c) (i)

- Hold the ball vertically above the dot on the board, as shown in Fig. 2.4.
- Release the ball so that it bounces from the board and strikes the card.
- Continue releasing the ball from different heights until the ball strikes the line A.
- The height of the ball above the dot is *h*.

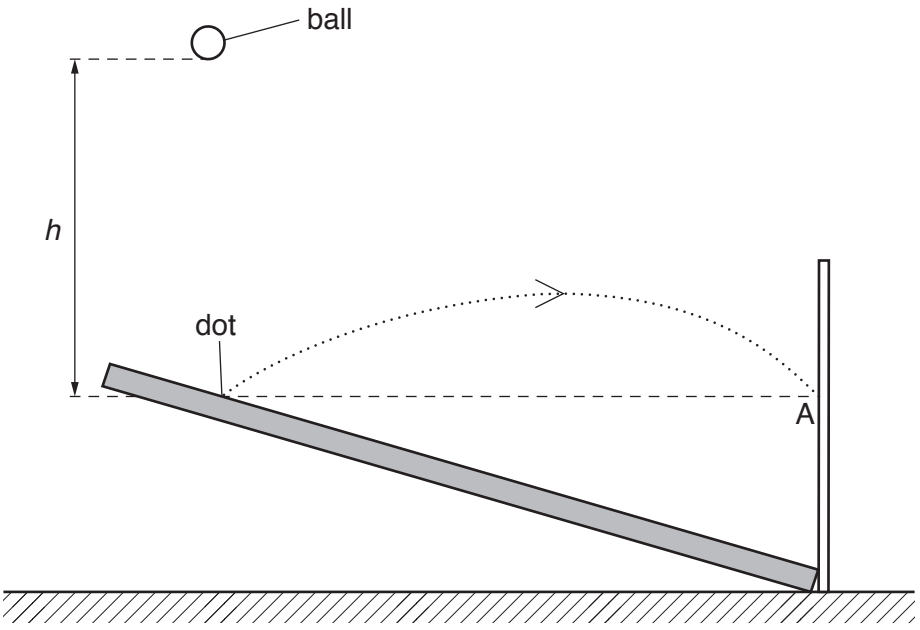

Fig. 2.4

Measure and record *h*.

h = ... [1]

(ii) Estimate the percentage uncertainty in your value of *h*.

percentage uncertainty = ... [1]

(d) • Adjust the apparatus so that θ is approximately 15°.

Measure and record θ and repeat **(a)(ii)**.

θ = ... °

$(\sin 2\theta)(\cos 2\theta)$ = ...

• Repeat **(b)**, labelling your second line B.

d = ...

• Repeat **(c)(i)** using line B.

h = ...
[3]

(e) It is suggested that the relationship between h, d and θ is

$$h = \frac{kd}{(\sin 2\theta)(\cos 2\theta)}$$

where k is a constant.

(i) Using your data, calculate two values of k.

first value of k = ...

second value of k = ...
[1]

(ii) Explain whether your results support the suggested relationship.

.....

.....

.....

..... [1]

(f) (i) Describe four sources of uncertainty or limitations of the procedure for this experiment.

1. .....

.....

2. .....

.....

3. .....

.....

4. .....

.....

[4]

(ii) Describe four improvements that could be made to this experiment. You may suggest the use of other apparatus or different procedures.

1. .....

.....

2. .....

.....

3. .....

.....

4. .....

.....

[4]

[Total: 20]

Permission to reproduce items where third-party owned material protected by copyright is included has been sought and cleared where possible. Every reasonable effort has been made by the publisher (UCLES) to trace copyright holders, but if any items requiring clearance have unwittingly been included, the publisher will be pleased to make amends at the earliest possible opportunity.

To avoid the issue of disclosure of answer-related information to candidates, all copyright acknowledgements are reproduced online in the Cambridge Assessment International Education Copyright Acknowledgements Booklet. This is produced for each series of examinations and is freely available to download at www.cambridgeinternational.org after the live examination series.

Cambridge Assessment International Education is part of the Cambridge Assessment Group. Cambridge Assessment is the brand name of the University of Cambridge Local Examinations Syndicate (UCLES), which itself is a department of the University of Cambridge.

© UCLES 2019